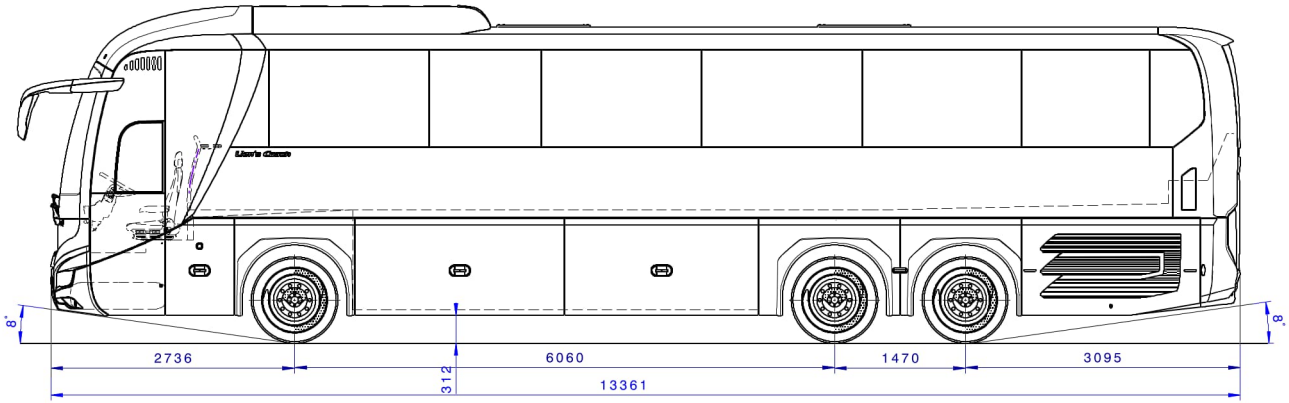

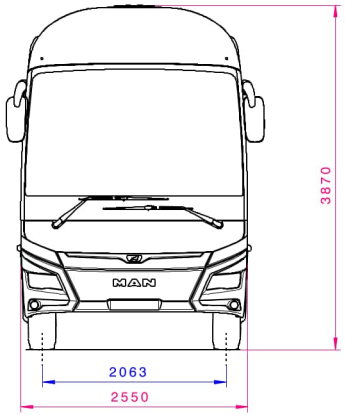

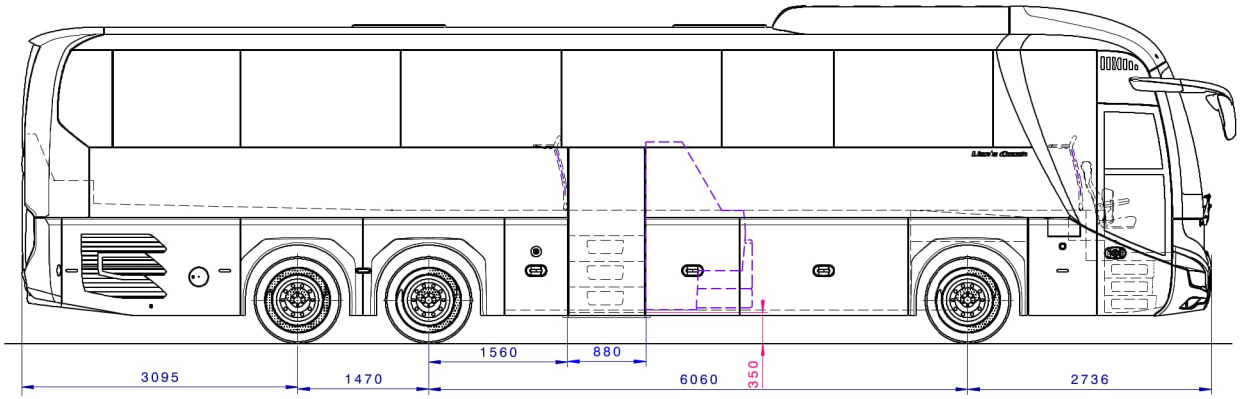

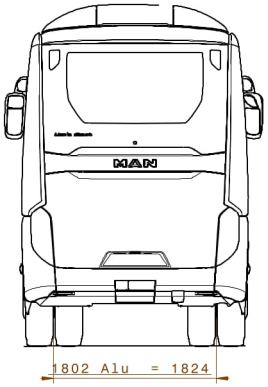

Koltuk baglant1s1 için:
83.78000-8692

for Seat Attachment see:
83.78000-8692

Aksi belirtilmedikçe koltuk montaj tolerans1 ±5mm'dir.

Unless otherwise indicated seat assembly tolerence is ±5mm.

Ölçüm noktalar1
UN regülasyon No.107'ye göre
Madde 7.7.8.4 ve 7.7.8.5
paragraf 7.7.8.4 ve 7.7.8.5

Measuring Point according to
UN Regulation No. 107
ITEM 7.7.8.4 and 7.7.8.5 paragraphs
7.7.8.4 and 7.7.8.5

Arka S1ra Koltuk Montaj1
Rear Bench Seat Installation

Avance arka s1ra seri koltuk için X = 60mm
Create arka s1ra seri koltuk için X = 60mm

for Avance rear bench serial seats X = 60mm
for Create rear bench serial seats X = 60mm

Koltuk Rayi
Seat Rail

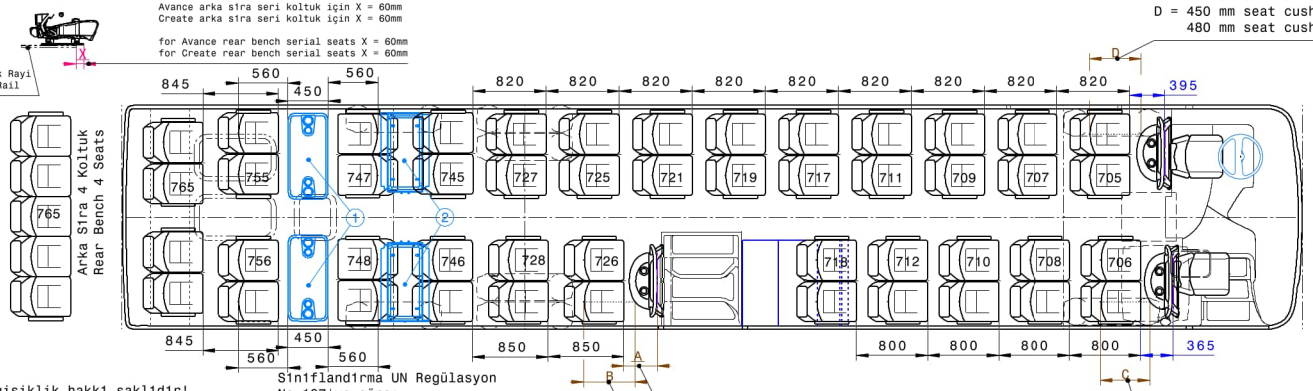

D = 450 mm minder 581 mm
480 mm minder 611 mm
D = 450 mm seat cushion 581 mm
480 mm seat cushion 611 mm

Degisiklik hakk1 sakl1d1r!

Resimler seri sevkiyat1 kapsamayan özel donan1mlar icerebilir.

Subject to change without notice!

Illustration can show as well special equipment, which is not included in serial scope of delivery

S1n1fland1rma UN Regülasyon No.107'ye göre:
- S1n1f III

Ekipman EK VIII'e göre:
- EK VIII aranmaz

Classification according to UN Regulation No. 107
- Class III

Equipment according to Annex 8:
- Without Annex VIII

A = Ay1rma Duvar1 375mm
FRENZEL Mutfak 307mm (Sark1nt1 80mm)
TM Mutfak 280mm (Sark1nt1 80mm)
A = Partition Wall 375mm
FRENZEL Kitchen 307mm (Overhang 80mm)
TM Kitchen 280mm (Overhang 80mm)

B = 450 mm minder 574 mm
480 mm minder 604 mm
B = 450 mm seat cushion 574 mm
480 mm seat cushion 604 mm

C = 450 mm minder 555 mm
480 mm minder 585 mm
C = 450 mm seat cushion 555 mm
480 mm seat cushion 585 mm

Minder derinligi 450mm&480mm
Cushion depth 450mm&480mm

POS.	MAN INDIVIDUAL EINBAU
1	Vis-a-Vis
2	Trapezkühlscrank

Uyar1: Ölçek 1:30
Attention: Scale 1:30

Koltuk Tipi Seat Type	S1rt Kal1nl1g1 Backrests Thickness	Koltuk Say1s1 Seats Available	Sol S1ra Seat Rows left	Sag S1ra Seat Rows right	Tuvalet Toilet	Mutfak Kitchen
Kiel Avance 1020/2010 Kiel Avance 1020/2010 Slim Brusa Create 120/100 Brusa Create 100 Slim	35mm 25mm 35mm 25mm	48/49	13	11	var with	var/yok with/without

Passmaß Fit Size Deviations	Abmaße	A.Ind. Revis.	Anzahl Quant.	And.-Nr./Rate Revis.no./Rate	Datum/Bearbeiter Date/Drawn	Abt./Werk Dept./Plant	Datum/Ko.-Freig. Date/Design-rel.	Datum/Norm/Gepr. Date/Stand./Check
Erstfreigabe: Ist release:		–	-					

← Änderungsindex / Änderungsnummer Rate
Revision / Revision no. Rate

Verw./Used on: R09

Freigabebedingung.f. Kaufteile n. MAN239
Rel.Cond. for purch.parts acc. to MAN239

Zeichn.-Ausf. n. M3056
Techn. drawing acc. to M3056: A1

Kennzeichn.n./Identificat.acc. to M3010: S

System: CATIA/WT V5

Allgemeintoleranzen und/oder TL:
Gen. tolerances and/or tech.deliv.cond.: M 3199

	Datum/Date	Name/Name
Bearbeiter Drawn	26,12,24	M.Demir
Abt./Werk Dept./Plant	MEOV-T	T
Ko.-Freig. Design-rel.		
Norm/Gepr. Stand./Check		

Oberflächenschutz/Surface protection:

MAN Türkiye A.S. Werk Ankara

Maßstab/Scale: 1:30 (1:30) Gew./Weight: kg

Werkst./Halbz. Material

Rohteil-Nr./Blank no.

Benennung/Title
SITZANORDNUNG
13/11 SITZREIHEN MAX. 49 SITZE
INSTALLATION SEAT

Sachnummer/Identification no.
Lub 108266

Bl./Sheet 01 DE/EN

Entst.aus/Source: Ers.für/Repl.:

All rights reserved acc. to ISO 16016
Alle Rechte vorbehalten gemäß ISO 16016. Weitergabe und Verwertung des Inhaltes ohne schriftliche Zustimmung des Urhebers verboten.

(In Originalmaßstab/full-scale 200 mm)